Available online at www.sciencedirect.com
SCIENCE DIRECT®
Journal of Organometallic Chemistry 689 (2004) 544–551
Journal of Organometallic Chemistry
www.elsevier.com/locate/jorganchem

Syntheses and characterizations of group 6 metal cyanotrihydroborate complexes ☆

Fu-Chen Liu [a,*], Yow-Chuan Sheu [a], Jo-Ju She [a], Yu-Chang Chang [b], Fung-E Hong [b], Gene-Hsian Lee [c], Shie-Ming Peng [c]

[a] *Department of Chemistry, National Dong Hwa University, Hualien 974, Taiwan, ROC*
[b] *Department of Chemistry, National Chung-Hsing University, Taichung 402, Taiwan, ROC*
[c] *Department of Chemistry, National Taiwan University, Taipai 106, Taiwan, ROC*

Received 21 August 2003; accepted 13 November 2003

Abstract

The anions, $[M(CO)_{6-n}(NCBH_3)_n]^{n-}$ ($n = 2$, M = Cr(**1**); $n = 3$, M = Cr(**2**), Mo(**3**), W(**4**)), were prepared either from the reactions of sodium cyanotrihydroborate with group 6 transition metal hexacarbonyls, $M(CO)_6$ (M = Cr, Mo, W), or through the reactions of $M(CO)_3(CH_3CN)_3$ (M = Cr, W) with sodium cyanotrihydroborate. The cyanotrihydroborate ligand bonds to the metal through a nitrogen atom, which was confirmed by the Infrared, proton and boron NMR spectroscopies. Crystal structures of the above complexes were determined by single crystal X-ray diffraction analyses. A *cis* configuration is found in **1**. Molecular structures of **2**, **3**, and **4** are similar and a *facial* configuration is observed.
© 2003 Elsevier B.V. All rights reserved.

Keywords: Cyanotrihydroborate; Organohydroborate; Hydroborate; Crystal structure; Hexacarbonyl

1. Introduction

Sodium cyanotrihydroborate is a mild reducing agent; it plays an important role in organic and inorganic syntheses [1]. It also displays versatile chemistry in the formation of transition metal complexes. Many cyanotrihydroborate metal complexes have been prepared and the bonding interactions between the metal and the cyanotrihydroborate ligand have been studied [2–4]. The cyanotrihydroborate anion uses either the nitrogen atom, or both the nitrogen and the BH hydrogen atoms to bond to the metal, thus, two kinds of bonding interactions; M–$NCBH_3$ and M–$NCBH_2H$–M, have been observed. In addition, cleavage of the NC–BH_3 bond to form a CN containing compounds [3c,3d,4e] or formation of the isomeric M–$CNBH_3$ compounds [3c] have also been reported. In most cases Infrared spectroscopy has been the only tool employed to identify the bonding mode between the metal and the cyanotrihydroborate anion [3]. To our knowledge, few cyanotrihydroborate complexes [3h,3i,4] have been structurally characterized through the X-ray diffraction technique. Although much has been published concerning cyanotrihydroborate chemistry, these previous studies were focused on late transition metal complexes, and only few examples of early transition metals have been studied [4g,5]. In the present work we report the preparations, properties, and the structural characterizations of group 6 metal cyanotrihydroborate complexes.

2. Results and discussion

2.1. Preparations of $[M(CO)_{6-n}(NCBH_3)_n]^{n-}$ ($n = 2$, M = Cr(**1**); $n = 3$, M = Mo(**3**), W(**4**))

The complexes $[N(CH_3)_4]_n[M(CO)_{6-n}(NCBH_3)_n]$ ($n = 2$, M = Cr(**1**); $n = 3$, M = Mo(**3**), W(**4**)) were prepared from the reactions of $M(CO)_6$ (M = Cr, Mo, W)

☆ Supplementary data associated with this article can be found, in the online version, at doi:10.1016/j.jorganchem.2003.11.005.

* Corresponding author. Tel.: +886-3-8633601; fax: +886-3-8633570.
E-mail address: fcliu@mail.ndhu.edu.tw (F.-C. Liu).

0022-328X/$ - see front matter © 2003 Elsevier B.V. All rights reserved.
doi:10.1016/j.jorganchem.2003.11.005

with two or three equivalents of $NaBH_3CN$, followed by the metathesis of the $[Na]^+$ cation by the $[N(CH_3)_4]^+$ cation in the 1,2-dimethoxyethane (DME) solvent, as shown in Eqs. (1) and (2). In the reaction of $Mo(CO)_6$ with three equivalents of $NaBH_3CN$, complex **3** was the only isolated product. However, the cyanotrihydroborate di- and tri-substituted compounds $[Na]_n[M(CO)_{6-n}(NCBH_3)_n]$ ($n = 2, 3$; M = Cr, W) were obtained when the sodium cyanotrihydroborate reacted with chromium carbonyl or tungsten carbonyl, and the major product was the cyanotrihydroborate disubstituted complexes $[Na]_2[M(CO)_4(NCBH_3)_2]$, (M = Cr, W). The cyanotrihydroborate disubstituted complex **1** was isolated through the extraction of the reaction mixture by DME solvent. The cyanotrihydroborate trisubstituted complex **4** was obtained through fractional crystallization from the DME/CH_3CN mixed solvent. A low yield of complex **4** was obtained.

$$\begin{aligned} &M(CO)_6 + nNa[BH_3CN] \\ &\xrightarrow{DME} [Na]_n[M(CO)_{6-n}(NCBH_3)_n] + nCO \\ &\quad (n = 2, M = Cr;\ \ n = 3, M = Mo, W) \end{aligned} \tag{1}$$

$$\begin{aligned} &[Na]_n[M(CO)_{6-n}(NCBH_3)_n] + n[(CH_3)_4N]Cl \\ &\xrightarrow{DME} [(CH_3)_4N]_n[M(CO)_{6-n}(NCBH_3)_n] + nNaCl \\ &\quad (n = 2, M = Cr;\ \ n = 3, M = Mo, W) \end{aligned} \tag{2}$$

2.2. Preparations of $[M(CO)_3(NCBH_3)_3]^{3-}$ (M = Cr(2), W(4))

Complexes **2** and **4** could be obtained in good yield from the reaction of $M(CO)_3(CH_3CN)_3$ (M = Cr, W) [6] with three equivalents of $NaBH_3CN$ in acetonitrile, followed by a metathesis of the $[Na]^+$ cation by the $[N(CH_3)_4]^+$ cation in DME solvent, as shown in Eqs. (3) and (4). It is obvious that the coordinating ability of the cyanotrihydroborate anion to the metal center is far better than that of the acetonitrile, as the acetonitrile was used in these reactions.

$$\begin{aligned} &M(CO)_3(NCCH_3)_3 + 3Na[BH_3CN] \\ &\xrightarrow{CH_3CN} [Na]_3[M(CO)_3(NCBH_3)_3] + 3CH_3CN \\ &\quad (M = Cr, W) \end{aligned} \tag{3}$$

$$\begin{aligned} &[Na]_3[M(CO)_3(NCBH_3)_3] + 3[(CH_3)_4N]CL \\ &\xrightarrow{DME} [(CH_3)_4N]_3[M(CO)_3(NCBH_3)_3] + 3NaCl \\ &\quad (M = Cr, W) \end{aligned} \tag{4}$$

Complexes **1**, **2**, **3**, and **4** were crystallized either from a CH_3CN/THF or CH_3CN/DME mixed solvent. A DME molecule co-crystallized with complexes **2**, **3**, and **4**. Complex **1** is stable in air for weeks, however, complexes **2**, **3**, and **4** are very air sensitive and decompose in the air within seconds. Complex **1** is very soluble in acetonitrile and it is slightly soluble in DME, THF, and diethyl ether, however, the cyanotrihydroborate trisubstituted complexes **2**, **3**, and **4** are only soluble in acetonitrile.

2.3. NMR and infrared spectral studies

The boron resonances of complexes **1**, **2**, **3**, and **4** appear in the range −41.5 to −42.9 ppm with a B–H coupling constant of 89 Hz. In the proton spectra, the resonances of the BH_3 hydrogens of these complexes appear in the range 0.30–0.37 ppm as a broad quartet. These chemical shifts and coupling constants are consistent with those found in $NaBH_3CN$ (−43.5 ppm, $J_{B-H} = 89.0$ ppm) [7] and those reported in the cyanotrihydroborate complexes [2d,4a,4b,5b], which suggest that the coordination of the $[BH_3CN]^-$ ligand to the metal is through a nitrogen atom. Although the boron chemical shifts of the cyanohydroborate-bridged complexes have not been reported, significant changes have been observed in other organohydroborate ligands upon coordinating of the B–H hydrogen to the metal [8]. The narrow ranges of the chemical shifts of the boron and the BH_3 hydrogen atoms in complexes **1, 2, 3,** and **4** indicate little change of the electron density on the boron and the hydrogen nuclei upon coordination of the nitrogen to the metal.

Table 1 lists the Infrared data of the complexes **1, 2, 3, 4,** $[N(CH_3)_4][NCBH_3]$, and $Na[NCBH_3]$. These absorptions were assigned in accord with assignments in the literature [3,4]. In earlier studies Infrared spectroscopy is the major tool to identify the bonding modes between the metal and the cyanotrihydroborate ligand. The absorption bands of the cyanotrihydroborate ligand in complexes were often compared with those observed in sodium cyanotrihydroborate. As shown in Table 1, there are significant differences in the absorption bands between the $Na[BH_3CN]$ and the $[N(CH_3)_4][BH_3CN]$. Obviously, the counterion effect of the cation plays an important role in these two salts, and we believe that comparison of these bands between complexed cyanotrihydroborates (most of them are neutral compounds) and sodium cyanotrihydroborate in the literature are not relevant.

Three terminal ν_{BH} bands are found in each complex. As shown in Table 1, these absorption bands do not shift significantly from those found in complex $[N(CH_3)_4][NCBH_3]$. This result is consistent with that found in the NMR study, where little change of the BH_3 chemical shifts was found upon coordination of the nitrogen to the metal. Two C≡N absorption bands are observed in each complex, while one absorption band (about 2230 cm^{-1}) is at about the same position as that of the free ion, the other band has a blue shift of 17–25 cm^{-1} from that of the free anion. Such blue shifts are

Table 1
Selected infrared data of compounds **1**, **2**, **3**, and **4**

	ν_{BH}	ν_{CN}	ν_{CO} (cm^{-1})
$[N(CH_3)_4]_2[Cr(CO)_4(NCBH_3)_2]$	2342(m) 2286(w, sh) 1129(m)	2227(w) 2197(w)	1898(vs, br) 1869(vs) 1858(vs) 1803(vs)
$[N(CH_3)_4]_3[Cr(CO)_3(NCBH_3)_3]\cdot DME$	2342(m) 2295(w, sh) 1130(m)	2229(vw) 2194(vw)	1897(vs) 1750(vs, br)
$[N(CH_3)_4]_3[Mo(CO)_3(NCBH_3)_3]\cdot DME$	2345(m) 2291(w, sh) 1126(m)	2229(w) 2190(w)	1896(vs) 1764(vs, br)
$[N(CH_3)_4]_3[W(CO)_3(NCBH_3)_3]\cdot DME$	2344(m) 2289(w, sh) 1126(m)	2228(vw) 2189(vw)	1884(vs) 1741(vs, br)
$[N(CH_3)_4][NCBH_3]$	2339(s) 2301(s, sh) 1132(m)	2232(w) 2172(s)	
$Na[BH_3CN]$	2367(s) 2347(s,sh) 1135(m)	2244(w) 2185(s)	

common for coordinated cyanotrihydroborate ligands [3,4] and is attributed to the increasing σ bonding between the carbon and the nitrogen [9], where a weakly bound M–$NCBH_3$ is formed.

As shown in Table 1, Infrared spectra reveal four carbonyl bands for complex **1** and two carbonyl bands for each cyanotrihydroborate trisubstituted complex **2**, **3**, and **4**. Each cyanotrihydroborate trisubstituted complex has a low energy carbonyl band compared to complex **1**. This low energy shift of the cyanotrihydroborate trisubstituted complex is due to the weak π back bonding ability of the cyanotrihydroborate ligand [10], where the metal transfers more electron density to the π^* antibonding orbital of the carbonyl ligands and weaken the C=O bonds, resulting in a low energy shift of the carbonyl bands.

2.4. Molecular structures

The molecular structures of **1**, **2**, **3**, and **4** were determined by single-crystal X-ray diffraction analyses. The molecular structures of **2**, **3**, and **4** are similar to each other. The anions of **1** and **2** are shown in Figs. 1 and 2, and the molecular structures of **3** and **4** are included in the supporting information. The crystallographic data and selected positional parameters, bond distances, and bond angles of **1**, **2**, **3**, and **4** are given in Tables 2–6. To our knowledge, there is only one structurally characterized example of early transition metal cyanotrihydroborate complex been reported [4g]. The molecular structures of these anions are best described as distorted octahedral coordination. The corners of the octahedra are either occupied by a carbon atom or a nitrogen atom. A *cis* configuration of the cyanohydroborate ligands was observed in **1** and a *facial* configuration was found in **2, 3,** and **4**.

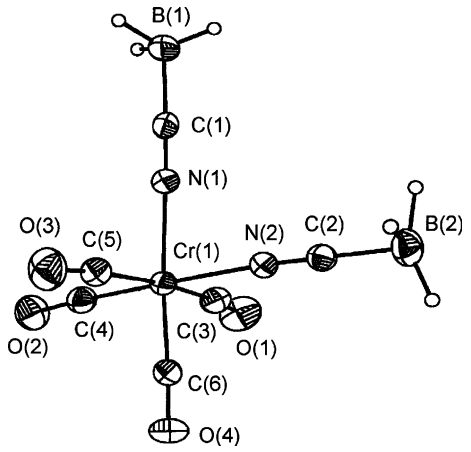

Fig. 1. Molecular structures of the anion in $[N(CH_3)_4]_2[Cr(CO)_4(NCBH_3)_2]$, (**1**) showing 50% probability thermal ellipsoids.

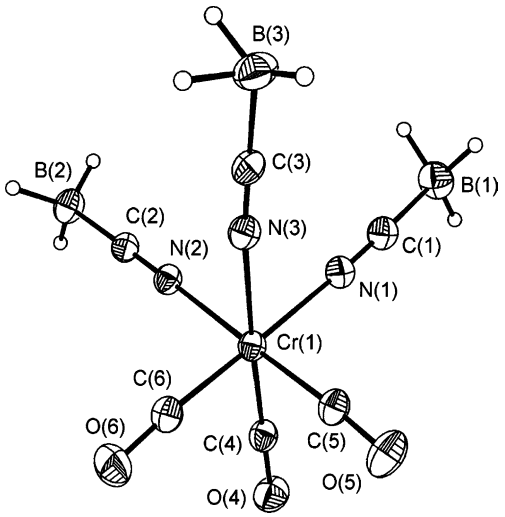

Fig. 2. Molecular structures of the anion in $[N(CH_3)_4]_3[Cr(CO)_3(NCBH_3)_3]\cdot DME$, (**2**) showing 50% probability thermal ellipsoids.

Selected bond distances and bond angles of complex **1** are shown in Table 3. The two carbonyls, C(3)–O(1) and C(5)–O(3), which are *trans* to each other, have C=O bond distances of 1.139(4) and 1.129(4) Å, respectively, while the other two carbonyls, C(4)–O(2) and C(6)–O(4), which are *trans* to the cyanotrihydroborate ligand, have C=O bond distances of 1.152(4) and 1.155(4) Å, respectively. The longer bond distances of C(4)–O(2) and C(6)–O(4) indicate a stronger π back bonding ability of these two carbonyls. This effect is also reflected on the Cr–C distances. While the Cr(1)–C(3) and Cr(1)–C(5) have bond distances of 1.905(4) and 1.884(4) Å, respectively, the two carbonyls which are *trans* to the cyanotrihydroborate ligand have the Cr–C bond

Table 2
Crystallographic data for $[N(CH_3)_4]_2[Cr(CO)_4(NCBH_3)_2]$ (**1**), $[N(CH_3)_4]_3[Cr(CO)_3(NCBH_3)_3]\cdot DME$ (**2**), $[N(CH_3)_4]_3[Mo(CO)_3(NCBH_3)_3]\cdot DME$ (**3**), and $[N(CH_3)_4]_3[W(CO)_3(NCBH_3)_3]\cdot DME$ (**4**)

Empirical formula	$C_{14}H_{30}B_2N_4O_4Cr$	$C_{22}H_{55}B_3N_6O_5Cr$	$C_{22}H_{55}B_3N_6O_5Mo$	$C_{22}H_{55}B_3N_6O_5W$
Formula weight	392.04	568.15	612.09	699.93
Temperature (K)	293(2)	200(2)	150(1)	293(2)
Crystal system	monoclinic	monoclinic	monoclinic	monoclinic
Space group	$P2_1/c$	$P2_1/n$	$P2_1/n$	$P2_1/c$
a (Å)	12.2737(8)	12.7774(10)	12.8302(1)	12.8621(6)
b (Å)	13.7533(9) Å	16.9412(10)	16.9505(2)	17.2107(8)
c (Å)	14.4740(10) Å	17.3407(10)	17.3100(2)	17.5164(8)
β (°)	107.2590(10)	109.981(10)	110.3705(7)	109.1530(10)
V (Å^3)	2333.3(3)	3527.7(4)	3529.12(6)	3662.9(3)
Z	4	4	4	4
ρ_{calc} (g/cm^3)	1.116	1.070	1.152	1.253
Crystal size (mm)	$0.29 \times 0.48 \times 0.62$	$0.42 \times 0.23 \times 0.12$	$0.40 \times 0.30 \times 0.17$	$0.54 \times 0.57 \times 0.72$
Radiation (λ, Å)	Mo-Kα (0.71073)	Mo-Kα (0.71073)	Mo-Kα (0.71073)	Mo-Kα (0.71073)
2θ limits (°)	2.09–26.01	2.40–25.03	1.72–27.50	1.71–26.02
Index ranges	$-13 \leqslant h \leqslant 15$	$-15 \leqslant h \leqslant 15$	$-16 \leqslant h \leqslant 16$	$-15 \leqslant h \leqslant 12$
	$-16 \leqslant k \leqslant 16$	$-20 \leqslant k \leqslant 20$	$-18 \leqslant k \leqslant 22$	$-21 \leqslant k \leqslant 17$
	$-17 \leqslant l \leqslant 14$	$-20 \leqslant l \leqslant 20$	$-21 \leqslant l \leqslant 22$	$-21 \leqslant l \leqslant 21$
Reflections collected	12,946	60,112	22,918	20,406
Unique reflections	4560	6224	8089	7197
Unique reflections [$I > 2.0\sigma(I)$]	832	1232	1304	1396
Completeness to θ (%)	99.5	99.9	99.8	99.8
μ (mm^{-1})	0.511	0.359	0.407	3.187
Data/restraints/parameters	4560/0/250	6224/0/370	8089/0/332	7197/0/334
R_1[a] [$I > 2.0\sigma(I)$]	0.0513	0.0727	0.0529	0.0389
wR_2[b] (all data)	0.1642	0.2316	0.1574	0.1255
R_{int}	0.0377	0.0434	0.0425	0.0398
Goodness-of-fit on F^2	0.955	1.099	1.104	0.825

[a] $R_1 = \sum ||F_o| - |F_c|| / \sum |F_o|$.

[b] $wR_2 = \left\{ \sum (F_o^2 - F_c^2)^2 \Big/ \sum w(F_o^2)^2 \right\}^{1/2}$.

distances of 1.826(4) and 1.827(4) Å . The C≡N bond distances are 1.129(4) and 1.137(4) Å, and the Cr–N–C angles are 175.2(3)° and 176.5(3)° in **1**. These bond distances and bond angles are comparable to those found in neutral, N bound cyanotrihydroborate complexes [4], where the bond distances occur in the range of 1.126(4)–1.16(2) Å and the M–N–C angles occur in the range of 164(1)–179(1)°. These results indicate the metal-cyanotrihydroborate interaction in the anionic complex is similar to that in the neutral complexes.

Selected bond distances and bond angles of complex **2** are shown in Table 4. An apparent π back bonding effect of **2** is observed in the comparison with that of the cyanotrihydroborate disubstituted complex **1**. Each carbonyl in **2** is *trans* to a cyanotrihydroborate ligand having C=O bond distances of 1.158(4), 1.163(5) and 1.179(5) Å, and having Cr–C bond distances of 1.810(4), 1.820(4), and 1.824(4) Å . These C=O bond distances are longer, and the Cr–C bond distances are shorter than those observed in **1,** due to the weak π back bonding ability of the cyanotrihydroborate ligand in **2**. The C≡N bond distances in **2** are 1.138(4), 1.145(5), and 1.151(5) Å, and the Cr–N–C angles are 172.6(3)°, 177.2(3)°.

The selected bond distances and bond angles of complexes **3** and **4** are shown in Tables 5 and 6. The C=O bond distances are 1.175(4), 1.176(4) and 1.182(4) Å in **3** and 1.161(7), 1.163(8) and 1.170(7) Å in **4**. These C=O bond distances are longer than those found in the cyanotrihydroborate disubstituted complex **1**. The C≡N bond distances are 1.137(4), 1.144(4), and 1.144(4) Å, and the Mo–N–C angles are 171.9(3)°, 177.1(3)°, and 178.6(3)° in **3,** and the C≡N bond distances are 1.125(7), 1.132(7), and 1.141(7) Å, and the W–N–C angles are 174.2(5)°, 175.9(5)°, and 179.6(5)° in **4**.

3. Experimental

3.1. General procedures

All manipulations were carried out on a standard high vacuum line or in a drybox under an atmosphere of nitrogen. 1, 2-Dimethoxyethane (DME) and THF were dried over sodium/benzophenone and freshly distilled prior to use. Acetonitrile was dried over P_2O_5 and freshly distilled prior to use. $Cr(CO)_6$, $Mo(CO)_6$, and $W(CO)_6$ were purchased from Strem Chemicals and used as received. Sodium cyanotrihydroborate was purchased from Acros, and $[N(CH_3)_4]Cl$ was purchased from Aldrich. $[N(CH_3)_4][NCBH_3]$ was prepared from

Table 3
Selected bond distances (Å) and bond angles (deg) for $[N(CH_3)_4]_2[Cr(CO)_4(NCBH_3)_2]$, (**1**)

Cr(1)–C(6)	1.826(4)
Cr(1)–C(4)	1.827(4)
Cr(1)–C(5)	1.884(4)
Cr(1)–C(3)	1.905(4)
Cr(1)–N(1)	2.089(3)
Cr(1)–N(2)	2.091(3)
C(3)–O(1)	1.139(4)
C(4)–O(2)	1.152(4)
C(5)–O(3)	1.129(4)
C(6)–O(4)	1.155(4)
N(1)–C(1)	1.137(4)
N(2)–C(2)	1.129(4)
B(1)–C(1)	1.582(6)
B(2)–C(2)	1.588(6)
C(6)–Cr(1)–C(4)	89.74(15)
C(6)–Cr(1)–C(5)	86.96(16)
C(4)–Cr(1)–C(5)	86.53(16)
C(6)–Cr(1)–C(3)	90.24(16)
C(4)–Cr(1)–C(3)	87.10(16)
C(5)–Cr(1)–C(3)	173.05(15)
C(6)–Cr(1)–N(1)	173.23(13)
C(4)–Cr(1)–N(1)	96.46(13)
C(5)–Cr(1)–N(1)	90.67(14)
C(3)–Cr(1)–N(1)	92.80(14)
C(6)–Cr(1)–N(2)	89.74(12)
C(4)–Cr(1)–N(2)	178.83(13)
C(5)–Cr(1)–N(2)	94.48(13)
C(3)–Cr(1)–N(2)	91.86(14)
N(1)–Cr(1)–N(2)	84.11(10)
C(1)–N(1)–Cr(1)	175.2(3)
C(2)–N(2)–Cr(1)	176.5(3)
N(1)–C(1)–B(1)	177.8(4)
N(2)–C(2)–B(2)	179.4(4)
O(1)–C(3)–Cr(1)	173.6(4)
O(2)–C(4)–Cr(1)	176.7(3)
O(3)–C(5)–Cr(1)	173.4(3)
O(4)–C(6)–Cr(1)	177.5(3)

Table 4
Selected bond distances (Å) and bond angles (deg) for$[N(CH_3)_4]_3[Cr(CO)_3(NCBH_3)_3]\cdot DME$, (**2**)

Cr(1)–C(4)	1.810(4)
Cr(1)–C(5)	1.820(4)
Cr(1)–C(6)	1.824(4)
Cr(1)–N(1)	2.098(3)
Cr(1)–N(2)	2.109(3)
Cr(1)–N(3)	2.112(3)
C(4)–O(4)	1.179(5)
C(5)–O(5)	1.158(4)
O(6)–C(6)	1.163(5)
N(1)–C(1)	1.145(5)
N(2)–C(2)	1.138(4)
N(3)–C(3)	1.151(5)
C(1)–B(1)	1.590(7)
C(3)–B(3)	1.581(6)
C(2)–B(2)	1.590(6)
C(4)–Cr(1)–C(5)	85.25(16)
C(4)–Cr(1)–C(6)	86.80(17)
C(5)–Cr(1)–C(6)	85.94(16)
C(4)–Cr(1)–N(1)	94.22(14)
C(5)–Cr(1)–N(1)	95.05(14)
C(6)–Cr(1)–N(1)	178.63(14)
C(4)–Cr(1)–N(2)	96.44(13)
C(5)–Cr(1)–N(2)	178.11(14)
C(6)–Cr(1)–N(2)	94.98(14)
C(4)–Cr(1)–N(3)	177.34(13)
C(5)–Cr(1)–N(3)	92.49(14)
C(6)–Cr(1)–N(3)	94.44(14)
N(1)–Cr(1)–N(2)	84.01(11)
N(1)–Cr(1)–N(3)	84.57(11)
N(2)–Cr(1)–N(3)	85.80(11)
O(4)–C(4)–Cr(1)	174.9(3)
O(5)–C(5)–Cr(1)	175.8(4)
O(6)–C(6)–Cr(1)	176.3(3)
C(1)–N(1)–Cr(1)	177.2(3)
C(3)–N(3)–Cr(1)	172.6(3)
C(2)–N(2)–Cr(1)	178.5(3)
N(1)–C(1)–B(1)	178.2(4)
N(2)–C(2)–B(2)	179.2(4)
N(3)–C(3)–B(3)	179.0(4)

the reaction of $Na[BH_3CN]$ with $[N(CH_3)_4]Cl$. $Cr(CO)_3(CH_3CN)_3$ and $W(CO)_3(CH_3CN)_3$ were prepared by literature procedures [6]. Elemental analyses were recorded on a Hitachi 270-30 spectrometer. Proton spectra (δ(TMS) 0.00 ppm) were recorded on a Varian Mercury 200 spectrometer operating at 199.975 MHz or recorded on a Varian Unity Inova 600 spectrometer operating at 599.948 MHz. ^{11}B spectra (externally referenced to $BF_3\cdot OEt_2$ (δ 0.00 ppm)) were recorded on a Varian Unity Inova 600 operating at 192.481 MHz. Infrared spectra were recorded on a Jasco FT/IR-460 Plus spectrometer with 2 cm^{-1} resolution.

3.2. X-ray structure determination

Suitable crystals of **1**, **3** and **4** were mounted and sealed inside glass capillaries under a nitrogen atmosphere. A single crystal of **2** was mounted on the tip of a glass fiber coated with fomblin oil (a perfluoropolyether). Crystallographic data collections of **1** and **4** were carried out on a Bruker AXS SMART 1000 diffractometer with graphite monochromated Mo Kα radiation ($\lambda = 0.71073$ Å) at 293(2) K. The absorption correction was based on the symmetry-equivalent reflections and was applied to the data using SADABS program [11]. Cell parameters were retrieved and refined using a SHELXTL PLUS package [12]. Crystallographic data collections of **2** and **3** were carried out on a Nonius KappaCCD diffractometer with graphite monochromated Mo Kα radiation ($\lambda = 0.71073$ Å) at 200(2) K (**2**) and 150(1) K (**3**). An empirical absorption was based on the symmetry-equivalent reflections and was applied to the data using the SORTAV program [13]. Cell parameters were retrieved and refined using DENZO-SMN software [14] on all reflections. Data reduction was performed with the DENZO-SMN software [14]. Structure analysis was made by using the SHELXTL program on a personal computer. The structure was solved using the SHELXS-97 program [15]

Table 5
Selected bond distances (Å) and bond angles (deg) for $[N(CH_3)_4]_3[Mo(CO)_3(NCBH_3)_3]\cdot DME$, (**3**)

Mo–C(2)	1.929(3)
Mo–C(3)	1.929(4)
Mo–C(1)	1.937(4)
Mo–N(3)	2.236(3)
Mo–N(2)	2.245(3)
Mo–N(1)	2.246(3)
C(1)–O(1)	1.175(4)
C(2)–O(2)	1.176(4)
C(3)–O(3)	1.182(4)
N(1)–C(4)	1.144(4)
N(2)–C(5)	1.137(4)
N(3)–C(6)	1.144(4)
C(4)–B(1)	1.584(5)
C(5)–B(2)	1.581(5)
C(6)–B(3)	1.589(6)
C(2)–Mo–C(3)	84.88(14)
C(2)–Mo–C(1)	85.81(14)
C(3)–Mo–C(1)	87.09(15)
C(2)–Mo–N(3)	95.95(13)
C(3)–Mo–N(3)	94.94(13)
C(1)–Mo–N(3)	177.41(12)
C(2)–Mo–N(2)	178.01(13)
C(3)–Mo–N(2)	96.70(12)
C(1)–Mo–N(2)	95.47(12)
C(2)–Mo–N(1)	93.58(12)
C(3)–Mo–N(1)	177.00(12)
C(1)–Mo–N(1)	95.37(12)
N(3)–Mo–N(2)	82.71(10)
N(3)–Mo–N(1)	82.65(10)
N(2)–Mo–N(1)	84.79(10)
C(4)–N(1)–Mo	171.9(3)
C(5)–N(2)–Mo	178.6(3)
C(6)–N(3)–Mo	177.1(3)
O(1)–C(1)–Mo	178.4(3)
O(2)–C(2)–Mo	179.0(3)
O(3)–C(3)–Mo	176.6(3)
N(1)–C(4)–B(1)	178.3(3)
N(2)–C(5)–B(2)	179.3(4)
N(3)–C(6)–B(3)	178.9(4)

Table 6
Selected bond distances (Å) and bond angles (deg) for $[N(CH_3)_4]_3[W(CO)_3(NCBH_3)_3]\cdot DME$, (**4**)

W–C(5)	1.930(7)
W–C(6)	1.929(7)
W–C(4)	1.942(7)
W–N(3)	2.210(5)
W–N(1)	2.211(5)
W–N(2)	2.223(5)
C(4)–O(1)	1.161(7)
C(5)–O(2)	1.170(7)
C(6)– O(3)	1.163(8)
N(1)–C(1)	1.125(7)
N(2)–C(2)	1.132(7)
N(3)–C(3)	1.141(7)
B(1)–C(1)	1.612(11)
B(2)–C(2)	1.601(11)
B(3)–C(3)	1.604(9)
C(5)–W–C(6)	86.2(3)
C(5)–W–C(4)	88.3(3)
C(6)–W–C(4)	86.3(3)
C(5)–W–N(3)	96.5(2)
C(6)–W–N(3)	177.0(3)
C(4)–W–N(3)	95.0(2)
C(5)–W–N(1)	94.8(2)
C(6)–W–N(1)	96.0(3)
C(4)–W–N(1)	176.2(2)
N(3)–W–N(1)	82.51(18)
C(5)–W–N(2)	176.8(2)
C(6)–W–N(2)	93.3(3)
C(4)–W–N(2)	94.9(2)
N(3)–W–N(2)	83.90(17)
N(1)–W–N(2)	82.00(18)
C(1)–N(1)–W	175.9(5)
C(2)–N(2)–W	174.2(5)
C(3)–N(3)–W	179.6(5)
N(1)–C(1)–B(1)	179.0(8)
N(2)–C(2)–B(2)	177.8(7)
N(3)–C(3)–B(3)	178.9(7)
O(1)–C(4)–W	177.9(6)
O(2)–C(5)–W	177.1(6)
O(3)–C(6)–W	179.3(7)

and refined using SHELXL-97 program [16] by full-matrix least-squares on F^2 values. For each structure, all nonhydrogen atoms were located and refined anisotropically. The hydrogen atoms on the boron atoms in **1** and **2** were located and refined isotropically and other hydrogen atoms were fixed at calculated positions and refined using a riding mode. Crystallographic data of **1**, **2**, **3**, and **4** are summarized in Tables 2–6. For complexes **2**, **3** and **4**, one DME molecule was also found in the crystal lattice.

3.3. Preparations of complexes

3.3.1. $[N(CH_3)_4]_2[Cr(CO)_4(NCBH_3)_2]$ (**1**)

$Cr(CO)_6$ (660 mg, 3.0 mmol), $NaBH_3CN$ (379 mg, 6.0 mmoL), and DME (20 ml) were placed in a 100 mL flask. After degasing, the flask was heated to reflux. During the process, the solution changes color from colorless to orange gradually. The carbon monoxide formed in this reaction was removed. After heating for 30 h, the solution was cooled to room temperature and 660 mg (6.0 mmol) of $(CH_3)_4NCl$ was added to the system. The solution changed color to light yellow after adding $(CH_3)_4NCl$. After stirring for 5 h, a yellow solution with yellow solids was formed. Sodium chloride was separated from the system through extraction of the product by DME solvent. A 729 mg (62% yield) of $[N(CH_3)_4]_2[Cr(CO)_4(NCBH_3)_2]$ was isolated after removal of the solvent. Yellow crystals of $[N(CH_3)_4]_2[Cr(CO)_4(NCBH_3)_2]$ were isolated from CH_3CN/THF solution at room temperature. ^{11}B NMR (CH_3CN) $\delta = -41.5$ ppm (q, $J_{B-H} = 89$ Hz). ^1H NMR (d_3-acetonitrile): δ 3.09 (s, $N(CH_3)_4$), 0.30 ppm (br, q, BH_3). IR(KBr): 3304(vw), 2962(vw), 2342(m), 2286(w, sh), 2227(w), 2197(w), 2171(vw), 2070(w), 1898(vs, br), 1869(vs), 1858(vs), 1803(vs), 1484(m), 1449(w), 1420(w), 1287(vw), 1129(m), 1019(vw), 949(m), 864(vw), 738(vw), 655(s), 557(w), 432(m) cm^{-1}. Anal. Calcd for

$C_{14}H_{30}B_2N_4O_4Cr$: N, 14.29; C, 42.89; H, 7.71; Found: N, 14.34; C, 42.79; H, 7.80%.

3.3.2. $[N(CH_3)_4]_3[Cr(CO)_3(NCBH_3)_3]\cdot DME$ (2)

$Cr(CO)_3(CH_3CN)_3$ (260 mg, 1.0 mmol) and $NaBH_3CN$ (190 mg, 3.0 mmol) were placed in a 50 mL flask, and the flask was evacuated. About 20 mL of acetonitrile was transferred into the flask at −78 °C. The flask was warmed to room temperature and heated to reflux for 3 h. The acetonitrile was removed under vacuum and 329 mg (3.0 mmol) of $(CH_3)_4NCl$ was charged to the flask. After degasing, about 20 mL of DME was transferred into the flask and the system was stirred at room temperature for 5 h. The yellow solution was separated from the yellow solids through filtration and the yellow solids were washed with 10 mL of DME twice. The filtrate was discarded and the yellow solids were extracted with acetonitrile. After removal of the solvent, the yellow solids were redissolved in a CH_3CN/DME mixed solvent for crystallization. Yellow crystals (397 mg, 70% yield) of $[N(CH_3)_4]_3[Cr(CO)_3(NCBH_3)_3]\cdot DME$ were obtained. ^{11}B NMR (CH_3CN) δ −42.9 ppm ($J_{B-H} = 89$ Hz). ^1H NMR (d_3-acetonitrile): δ 3.45 (s, DME), 3.39 (s, DME), 3.11 (s,$N(CH_3)_4$), 0.36 ppm (br, q, BH_3). IR(KBr): 3035(vw), 2963(vw), 2342(m), 2295(w, sh), 2229(vw), 2194(vw), 1897(vs), 1750(vs, br), 1485(m), 1448(vw), 1418(vw), 1261(vw), 1130(m), 1021(w), 949(m), 868(vw), 801(vw), 653(vw), 551(vw) cm^{-1}. Anal. Calcd for $C_{22}H_{55}B_3N_6O_5Cr$: N, 14.79; C, 46.51; H, 9.76; Found: N, 14.61; C, 46.11; H, 9.69%.

3.3.3. $[N(CH_3)_4]_3[Mo(CO)_3(NCBH_3)_3]\cdot DME$ (3)

A 262 mg (0.99 mmol) quantity of $Mo(CO)_6$, 190.5 mg (3.0 mmol) of $NaBH_3CN$, and 20 mL of DME were placed in a 100 mL flask. The system was evacuated and heated to reflux. The carbon monoxide formed was removed. During the process, the solution changed color to orange gradually and eventually it turned cloudy. The reaction was quenched after refluxing for three days and a two-layer phase was observed at room temperature. The lower layer is orange in color and the upper layer is light yellow in color. A 658 mg (6.0 mmol) quantity of $(CH_3)_4NCl$ were added to this system. After stirring for 5 h, the solvent was removed and the product was extracted with acetonitrile. Brown solids were obtained after removal of the solvent. The resulting brown solids were redissolved in a CH_3CN/DME mixed solvent for crystallization. A 448 mg (74% yield) of light yellow crystals were obtained. ^{11}B NMR (d_3-acetonitrile): $\delta = -42.1$ ppm (q, $J_{B-H} = 89$ Hz). ^1H NMR (d_3-acetonitrile): $\delta = 3.45$ (s, DME), 3.39 (s, DME), 3.13 (s, $N(CH_3)_4$), 0.36 ppm (br, q, BH_3). IR(KBr): 3487(w), 3034(w), 2957(vw), 2345(m), 2291(w, sh), 2229(w), 2190(w), 1896(vs), 1764(vs, br), 1484(s), 1448(w), 1416(w), 1286(vw), 1126(m), 1057(vw), 948(s), 864(w), 638(vw), 532(vw), 486(vw) cm^{-1}. Anal. Calcd for $C_{22}H_{55}B_3N_6O_5Mo$: N, 13.73; C, 43.17; H, 9.06; Found: N, 13.34; C, 41.74; H, 8.99%.

3.3.4. $[N(CH_3)_4]_3[W(CO)_3(NCBH_3)_3]\cdot DME$ (4)

Method 1. $W(CO)_6$ (347.5 mg, 0.99 mmol), $NaBH_3CN$ (196.0 mg, 3.1 mmol) and 20 mL of DME were placed in a 100 mL flask. The flask was evacuated and heated to reflux. The solution changed color to yellow gradually, and the carbon monoxide formed was removed. The solvent was removed after refluxing for four days. A 329 mg (3 mmol) quantity of $(CH_3)_4NCl$ was charged to the flask and the solution was stirred at room temperature for 6 h. The DME was removed and the resulting products were extracted with acetonitrile. After removal of the solvent, yellow solids were obtained and they were dissolved in a CH_3CN/DME mixed solvent for crystallization. A 76 mg (10.8% yield) of $[N(CH_3)_4]_3[W(CO)_3(NCBH_3)_3]\cdot$ DME was isolated.

Method 2. $W(CO)_3(CH_3CN)_3$ (391 mg, 1.0 mmol) and $NaBH_3CN$ (189 mg, 3.0 mmol) were placed in a 50 mL flask, and the flask was evacuated. About 20 mL of acetonitrile was transferred into the flask at −78 °C. The system was heated to reflux for 3 h, then the acetonitrile was removed and 330 mg (3.0 mmol) of $(CH_3)_4NCl$ was charged to the flask. After degassing, about 20 mL of DME was transferred into the flask. After stirring at room temperature for 6 h, The DME solvent was removed and a 20 mL portion of acetonitrile was transferred into the flask. The NaCl was removed by filtration and the acetonitrile was evacuated. The resulting yellow solid was redissolved in a CH_3CN/DME mixed solvent for crystallization. A 532 mg (76% yield) of $[N(CH_3)_4]_3[W(CO)_3\ NCBH_3)_3]\cdot DME$ was obtained. ^{11}B NMR (CH_3CN): δ −41.5 ppm (q, $J_{B-H} = 89$ Hz). ^1H NMR (d_3-acetonitrile): $\delta = 3.44$ (s, DME), 3.27 (s, DME), 3.11 (s, $N(CH_3)_4$), 0.37 ppm (br, q, BH_3). IR(KBr): 3445(w), 2909 (vw), 2344(m), 2289(w, sh), 2228(w), 2189(w), 1884(vs), 1741(vs, br), 1483(m), 1126(m), 1100(w), 1029(vw), 949 (m) cm^{-1}. Anal. Calcd for $C_{22}H_{55}B_3N_6O_5$ W: N, 12.00; C, 37.75; H, 7.92; Found: N, 12.08; C, 36.74; H, 7.81%.

4. Supplementary material

Crystallographic data for the structural analysis have been deposited with the Cambridge Crystallographic Data Center, CCDC Nos. 217842 (compound **1**), 217843 (compound **2**), 217844 (compound **3**), 217845 (compound **4**), Copies of this information may be obtained free of charge from The Director, CCDC, 12 Union Road, Cambridge CB2 1EZ, UK (fax: +44-1223-336033; e-mail: deposit@ccdc.cam.ac.uk or www: http://www.ccdc.cam.ac.uk).

Acknowledgements

We thank Dr. Shengming Liu (The Ohio State University) for the X-ray crystallography of complexes (**2**). This work was supported by the National Science Council of the ROC through Grant NSC 91-2113-M-259-010.

References

[1] (a) D. Comins, M. Weglarz, J. Org. Chem. 56 (1991) 2506;
(b) C.-Y. Cheng, C.-H. Hsieh, G.-H. Lee, S.-M. Peng, R.-S. Liu, Organometallics 15 (1996) 1565.

[2] (a) J.H. Morris, D. Reed, J. Chem. Res. (s) (1980) 378;
(b) D.J. Elliot, D.G. Holah, A.N. Hughes, S. Maciaszek, Can. J. Chem. 66 (1988) 81;
(c) D.J. Elliot, D.G. Holah, A.N. Hughes, S. Maciaszek, Inorg. Chim. Acta 96 (1985) L29;
(d) A. Drummond, J.F. Kay, J.H. Morris, D. Reed, J. Chem. Soc., Dalton Trans. (1980) 284.

[3] (a) D.H. Brown, J.H. Morris, A. Rodgers, W.E. Smith, Inorg. Chem. Acta 93 (1984) L69;
(b) D.G. Holah, A.N. Hughes, B.C. Hui, Can. J. Chem. 54 (1976) 320;
(c) M.N.I. Khan, C. King, J.-C. Wang, S. Wang, J.P. Frackler Jr., Inorg. Chem. 28 (1989) 4656;
(d) D.G. Holah, A.N. Hughes, N.I. Khan, Can. J. Chem. 62 (1984) 1016;
(e) J.F. Kay, J.H. Morris, D. Reed, J. Chem. Soc., Dalton (1980) 1917;
(f) D.G. Holah, A.N. Hughes, B.C. Hui, Can. J. Chem. 53 (1975) 3669;
(g) J.H. Morris, D. Reed, Inorg. Chim. Acta 54 (1981) L7;
(h) K.M. Melmed, T.-I. Li, J.J. Mayerle, S.J. Lippard, J. Am. Chem. Soc. 96 (1974) 69;
(i) B.G. Segal, S.J. Lippard, Inorg. Chem. 16 (1977) 1623;
(j) S.J. Lippard, P.S. Welcker, Chem. Commun. (1970) 515;
(k) L. Vaska, W.V. Miller, B.R. Flynn, Chem. Commun. (1971) 1615.

[4] (a) D.R. Derringer, K.-Y. Shih, P.E. Fanwick, R.A. Walton, Polyhedron 10 (1991) 79;
(b) K.-Y. Shih, P.E. Fanwick, R.A. Walton, Inorg. Chem. 30 (1991) 3971;
(c) R.J. Barton, D.G. Holah, H. Shengzhi, A.N. Hughes, S.I. Khan, B.E. Robertson, Inorg. Chem. 23 (1984) 2391;
(d) B.G. Segal, S.J. Lippard, Inorg. Chem. 13 (1974) 822;
(e) D.J. Elliot, S. Haukilahti, D.G. Holah, A.N. Hughes, S. Maciaszek, R.J. Barton, Y. Luo, B.E. Robertson, Can. J. Chem. 66 (1988) 1770;
(f) D.G. Holah, A.N. Hughes, R.T. Markewich, W. Xu, V.R. Magnuson, B.A. Nelson, Polyhedron 13 (1994) 2431;
(g) R. Hedelt, C. Schulzke, D. Rehder, Inorg. Chem. Commun. 3 (2000) 300.

[5] (a) B.D. James, M.G.H. Wallbridge, Prog. Inorg. Chem. 11 (1970) 99;
(b) S.J. Holmes, D.N. Clark, H.W. Turner, R.R. Schrock, J. Am. Chem. Soc. 104 (1982) 6322.

[6] F. Edelmann, P. Behrens, S. Behrens, U. Behrens, J. Organomet. Chem. 310 (1986) 333.

[7] J. Emri, B. Györi, Polyhedron 13 (1994) 2353.

[8] (a) F.-C. Liu, K.-Y. Chen, J.-H. Chen, G.-H. Lee, S.-M. Peng, Inorg. Chem. 42 (2003) 1758;
(b) J. Liu, E.A. Meyers, S.G. Shore, Inorg. Chem. 37 (1998) 496.

[9] K.F. Purcell, J. Am. Chem. Soc. 89 (1967) 6139.

[10] The back bonding ability of the cyanotrihydroborate ligand has been reported: S.J. Lippard, P.S. Welcker, Inorg. Chem. 11 (1972) 6.

[11] G.M. Sheldrick, SADABS: Siemens Area Detector Absorption Correction Softwares, University of Göttingen, Göttingen, Germany, 1997.

[12] G.M. Sheldrick, SHELXTL-Plus, NT Crystallographic System, release 5.1, Bruker Analytical X-ray Systems, Madison, WI, 1998.

[13] (a) R.H. Blessing, Acta Crystallogr., Sect. A A51 (1995) 33;
(b) R.H. Blessing, J. Appl. Crystallogr. 30 (1997) 421.

[14] DENZO-SMN Z. Otwinowsky, W. Minor, in: C.W. Carter, R.M. Sweet (Eds.), Methods in Enzymology, Vol. 276: Macromolecular Crystllography, Part A, Academic Press, New York, 1997, p. 307.

[15] SHELXS-97: G.M. Sheldrick, Acta Crystallogr. A 46 (1990) 467.

[16] G.M. Sheldrick, SHELXL-97, University of Göttingen, Göttingen, Germany, 1997.